OWNER'S MANUAL

MODELS:

LGJ & MGJ

INDUSTRIAL DUTY DOOR OPERATOR

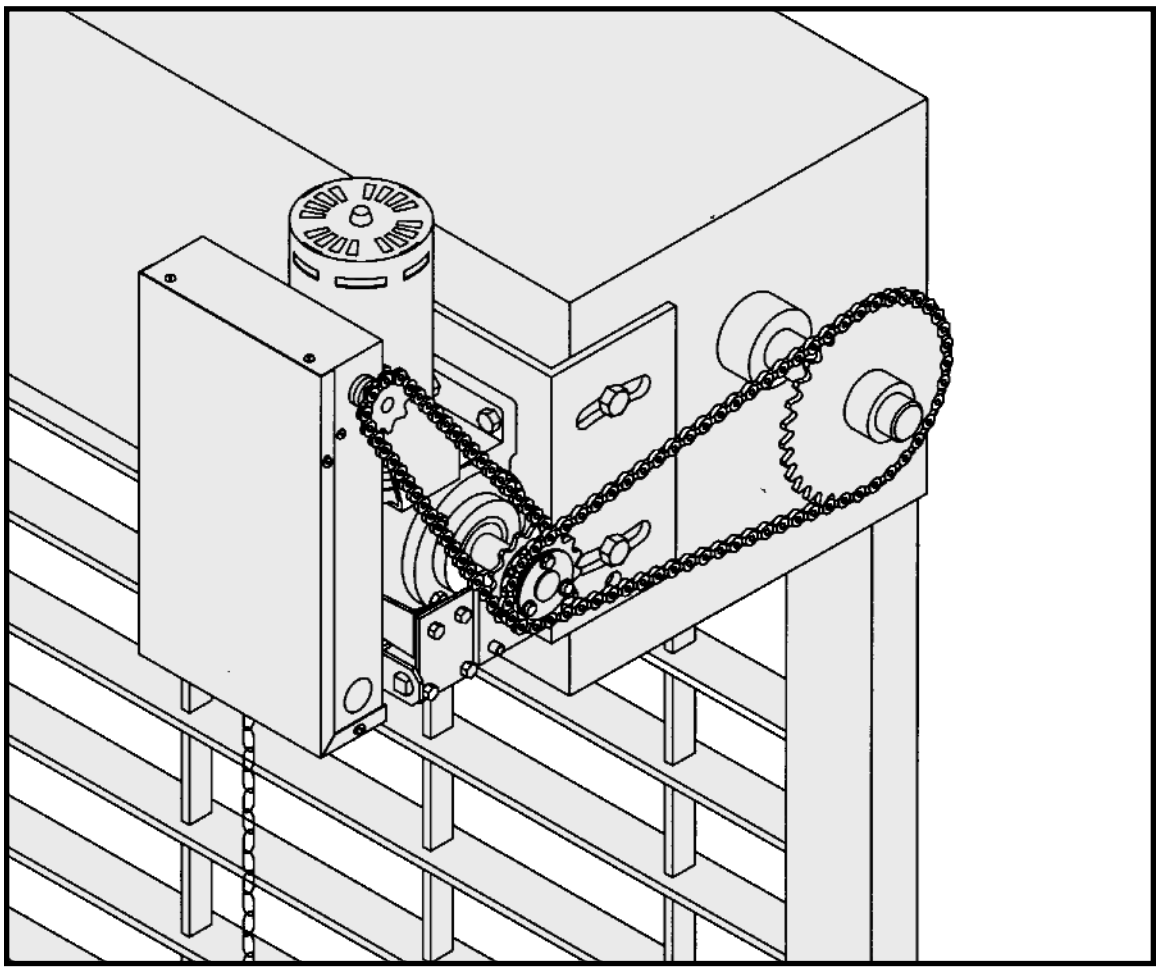

2 YEAR WARRANTY

Serial # _____
(located on electrical box cover)

Installation Date _____

Wiring Type _____

NOT FOR RESIDENTIAL USE

41B6

c UL us
LISTED

SPECIFICATIONS

MOTOR

TYPE: . . . . . .Intermittent Duty

HORSEPOWER: . . . . . .**MGJ:** 1/2 Hp 1 or 3 Phase
LGJ: 1/4 Hp 1 Phase

SPEED: . . . . . .**MGJ:** 1050 RPM
LGJ: 1725 RPM

VOLTAGE: **MGJ:**115, 60HZ, 1Ph
230V, 50 or 60Hz, 3Ph
230V, 60Hz, 1Ph
380V, 50Hz, 3Ph
460V, 60Hz, 3Ph
LGJ: 115V, 60Hz, 1Ph

CURRENT: See motor nameplate

ELECTRICAL

TRANSFORMER: 24VAC

CONTROL STATION: . . .NEMA 1 three button station. OPEN/CLOSE/STOP

WIRING TYPE: . . . . . .**MGJ:** B2-C2 (Factory Shipped)
LGJ: G2 (Factory Shipped)

See pages 13 and 14 for optional control settings and operating modes.

LIMIT ADJUST: . . . . . .Linear driven, fully adjustable screw type cams. Adjustable to 24 feet.

MECHANICAL

DRIVE REDUCTION: . . . . . 40:1 Reduction
(Heavy duty wormgear-in-oil-bath speed reducer)

OUTPUT SPROCKET: . . . . . Size #41

DOOR SPEED: . . . . . .**MGJ:** 1Ph, 23RPM
3Ph, 39RPM
. . . . . .**LGJ:** 1Ph, 43RPM

BEARINGS: . . . . . .Heavy duty wormgear-in-oil-bath speed reducer.

SAFETY

DISCONNECT: . . . . . .Floor level disconnect for emergency manual door operation.

REVERSING EDGE (Optional): . . Electric or pneumatic sensing device attached to the bottom edge of door

A REVERSING EDGE IS STRONGLY RECOMMENDED FOR ALL COMMERCIAL OPERATOR INSTALLATIONS. REQUIRED WHEN THE 3 BUTTON CONTROL STATION IS OUT OF SIGHT OF DOOR OR ANY OTHER CONTROL (AUTOMATIC OR MANUAL) IS USED.

MGJ WEIGHTS AND DIMENSIONS

HANGING WEIGHT: 80-110 LBS.

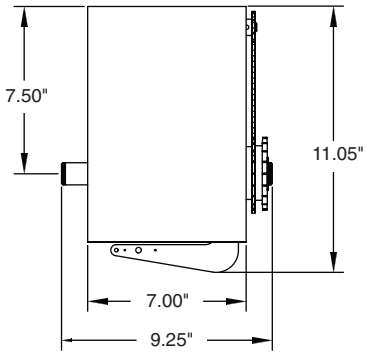

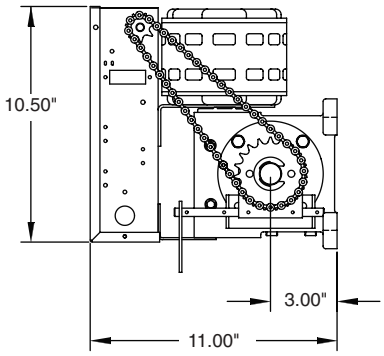

Mounting Dimensions

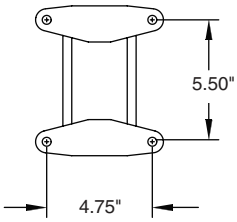

LGJ WEIGHTS AND DIMENSIONS

HANGING WEIGHT: 80-110 LBS.

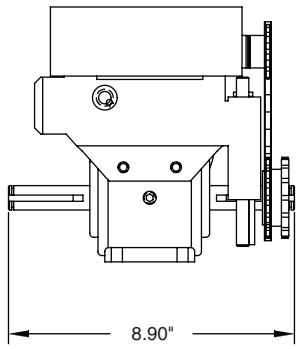

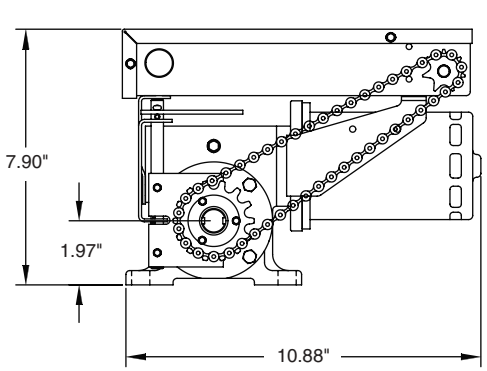

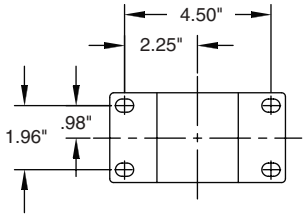

Mounting Dimensions

IMPORTANT SAFETY NOTES

⚠⚠ WARNING

To prevent possible SERIOUS INJURY or DEATH:

- DO NOT connect electric power until instructed to do so.
- If the door lock needs to remain functional, install an interlock switch.
- ALWAYS call a trained professional door serviceman if door binds, sticks or is out of balance. An unbalanced door may not reverse when required.
- NEVER try to loosen, move or adjust doors, door springs, cables, pulleys, brackets or their hardware, ALL of which are under EXTREME tension and can cause SERIOUS PERSONAL INJURY.
- Disable ALL locks and remove ALL ropes connected to door BEFORE installing and operating door operator to avoid entanglement.

SITE PREPARATIONS

It is imperative that the wall or mounting surface provide adequate support for the operator.

This surface must:

a) Be rigid to prevent play between operator and door shaft.

b) Provide a level base.

c) Permit the operator to be fastened securely and with the drive shaft parallel to the door shaft.

The safety and wear of the operator will be adversely affected if any of the above requirements are not met.

For metal buildings, fasten 2" x 2" x 3/16" (or larger) angle iron frames to the building purlins. For proper spacing, retain .2.75" between for model MGJ, butt purlins together for model LGJ. See Figure 1.

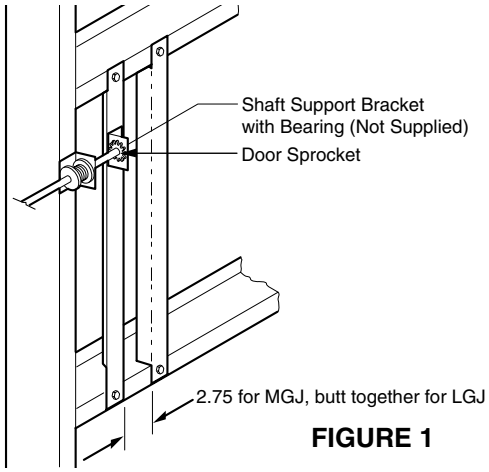

FIGURE 1

OPERATOR PREPARATION

Model LGJ: Shipped from the factory for right hand mounting, refer to preparation instructions on page 4 for Left hand mounting.

Model MGJ: Shipped from the factory for either left hand or right hand mounting. Refer to the last digit in the model number for handing of your unit. If necessary, model MGJ may also be field modified to accommodate opposite handing. Refer to the conversion instructions below and on page 4.

MGJ OPPOSITE HANDING PREPARATIONS

1. Remove Disconnect Assembly Components

Remove the master link from the limit chain, remove the chain and set it aside.

Remove the two E Rings securing the sprocket on the gear reducer shaft. Remove the screws securing the yoke to the disconnect shaft, set the yoke aside.

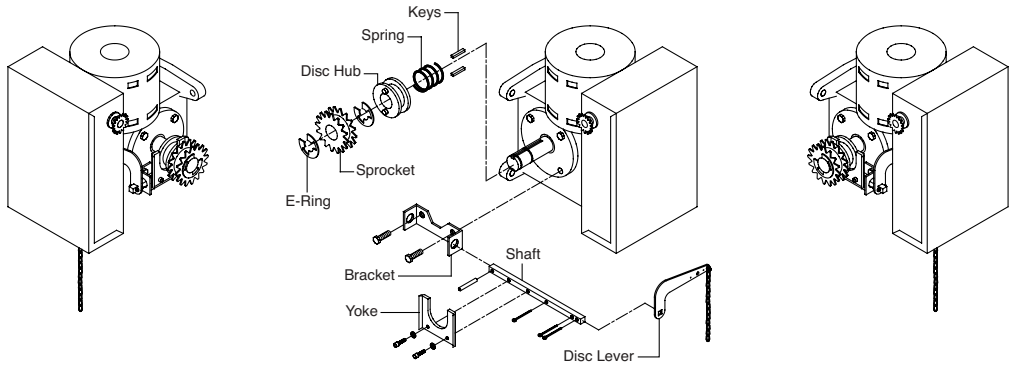

Remove the three cotter pins from the disconnect shaft. Do not discard the pins. Slide the disconnect shaft out of the support bracket. The release lever will now be free inside the motor frame. Remove the release lever and sash chain from the motor frame. Slide the disconnect hub, compression spring, and flatwasher from the end of the gear reducer shaft. Remove the disconnect support bracket by first removing the the two gear reducer housing screws. Replace the screws in the gear reducer and firmly tighten.

2. Re-assemble Disconnect Assembly

Remove the two screws on the opposite side of the gear reducer and mount the disconnect support bracket with the notched side facing the motor. For the remainder of the installation, follow the steps outlined above in reverse order, referring to the illustration as necessary.

LGJ LEFT HAND MOUNTING PREPARATIONS

LGJ Operators are assembled at the factory to be installed in a right hand (motor side up) configuration. To install an LGJ Operator on the left hand side of your door (motor side down), complete the three steps described below.

1. Reconfigure Disconnect Chain Assembly

The default configuration for the disconnect chain assembly is shown in Figure 1. This configuration allows the chain to hang freely when the operator is mounted on right side only. To insure smooth operation of the disconnect chain assembly when mounted motor side down, reconfigure as described below and as shown in figures 2 and 3.

1. Disconnect the key ring from the release cable.

2. Thread the release cable through the slot on the outermost edge of the support bracket, as shown in Figure 2.

3. Re-attach the key ring and sash chain to the end of the loop of release cable.

2. Set Limit Switch Direction

Locate Switch #1 on PCB in the electrical box. Place pole #2 of Switch #1 in the “OFF” position. With this setting limit switch labeled “A” is the close switch, limit switch labeled “B” is the open switch.

IMPORTANT: Refer to page 9 for for complete instructions on setting of limit switches.

3. Affix Electrical Box Cover Caution Label

Place the caution label on electrical box cover such that the text is read in the opposite direction of silkscreen.

FIGURE 1

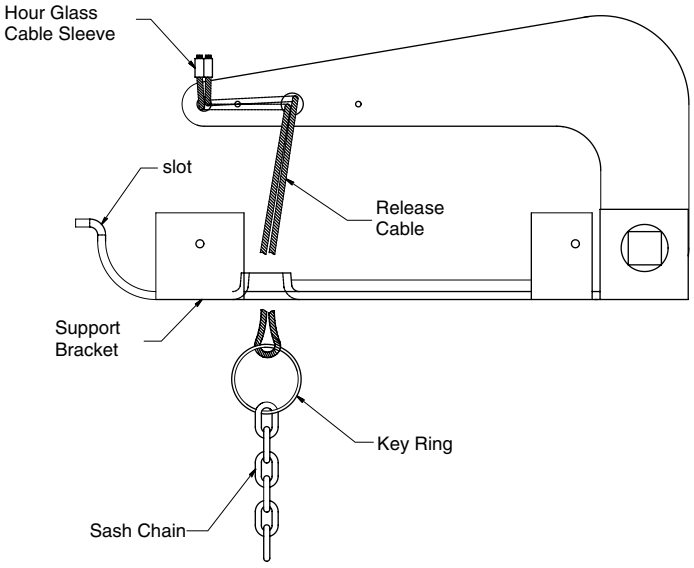

Disconnect Cable as shipped from the factory

FIGURE 2

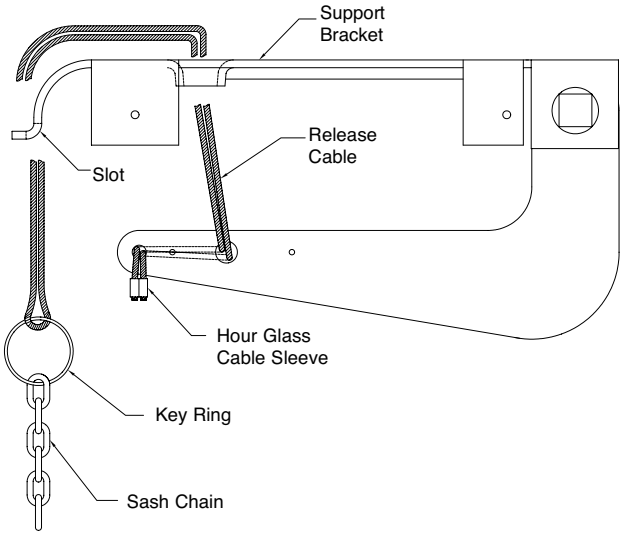

Disconnect Cable Re-routed for Left Hand Mounting

FIGURE 3

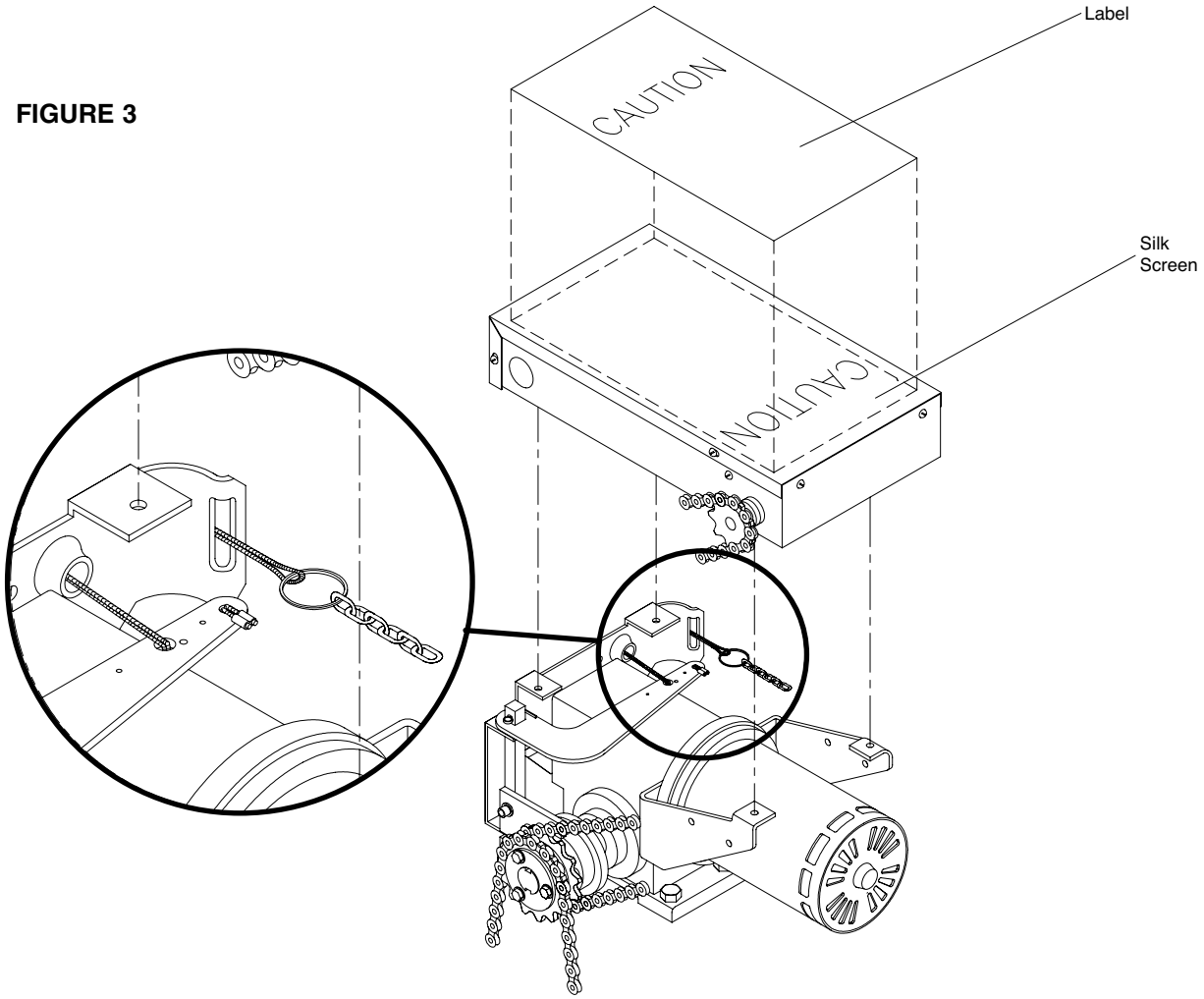

OPERATOR MOUNTING

Before your operator is installed, be sure the door has been properly aligned and is working smoothly. The operator may be wall mounted or mounted on a bracket or shelf. If necessary, refer to the operator preparations on page 3. Refer to the illustration and instructions below that suits your application.

1a. **Wall Mounting**
The operator should generally be installed below the door shaft, and as close to the door as possible. The optimum distance between the door shaft and operator drive shaft is between 12" - 15". Refer to Figure 3.

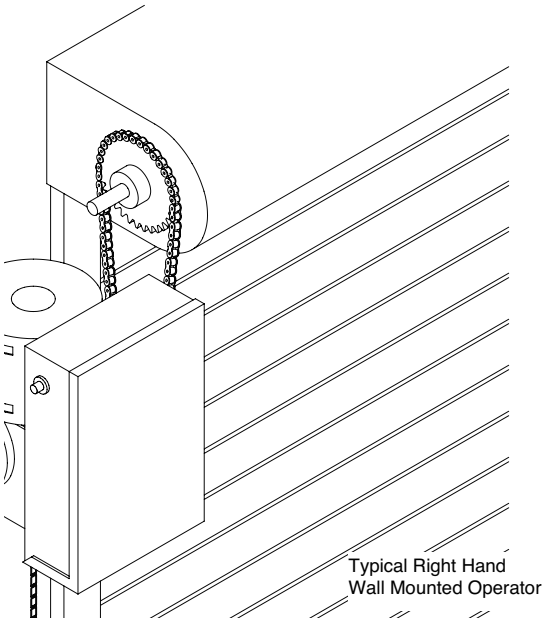

FIGURE 3

1b. **Bracket or Shelf Mounting**
The operator may be mounted either above or below the door shaft. The optimum distance between the door shaft and operator drive shaft is between 12" - 15". Refer to Figure 4.

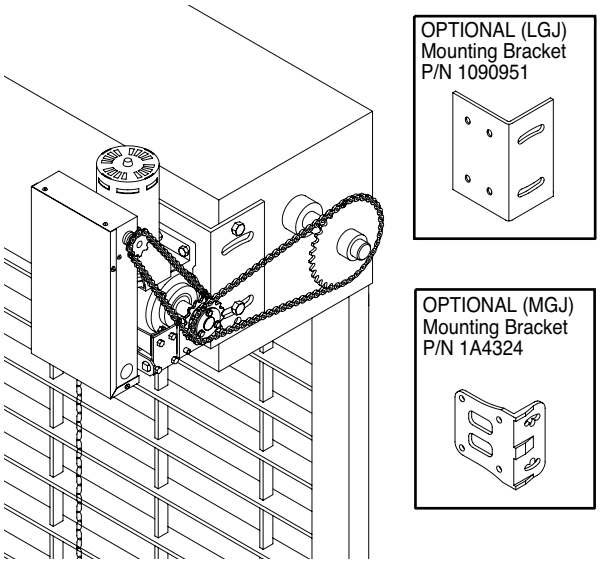

IMPORTANT: The shelf or bracket must provide adequate support, prevent play between operator and door shaft, and permit operator to be fastened securely and with the drive shaft parallel to the door shaft.

FIGURE 4

1c. Place door sprocket on the door shaft. Do not insert the key at this time.

2. Wrap drive chain around door sprocket and join roller chain ends together with master link.

3. Raise operator to approximate mounting position and position chain over operator sprocket.

4. Raise or lower operator until the chain is slightly taut (not tight). Make sure the operator output shaft is parallel to door shaft and sprockets are aligned. When in position, secure the operator to wall or mounting bracket.

5. Align sprockets and secure, (see Figure 5).

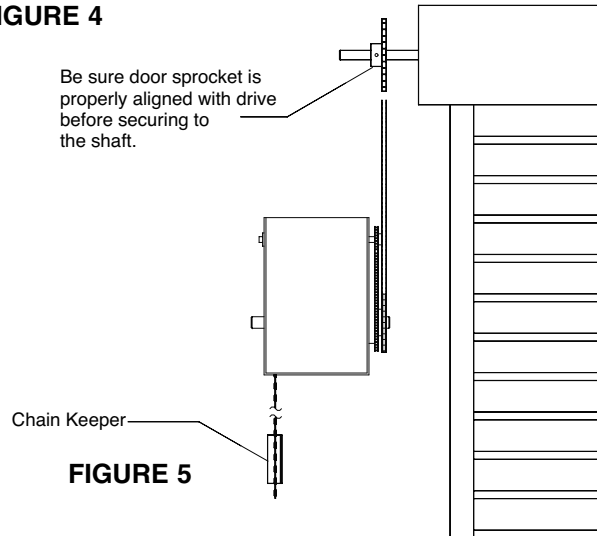

FIGURE 5

6. **Mount Chain Keeper / Keyhole Bracket**
   Using suitable hardware mount the chain keeper approximately 4 feet above the floor, near the free hanging chain. Remove disconnect sash chain from bag and place the end through the keyhole in the the chain keeper. Remove excess links if necessary.

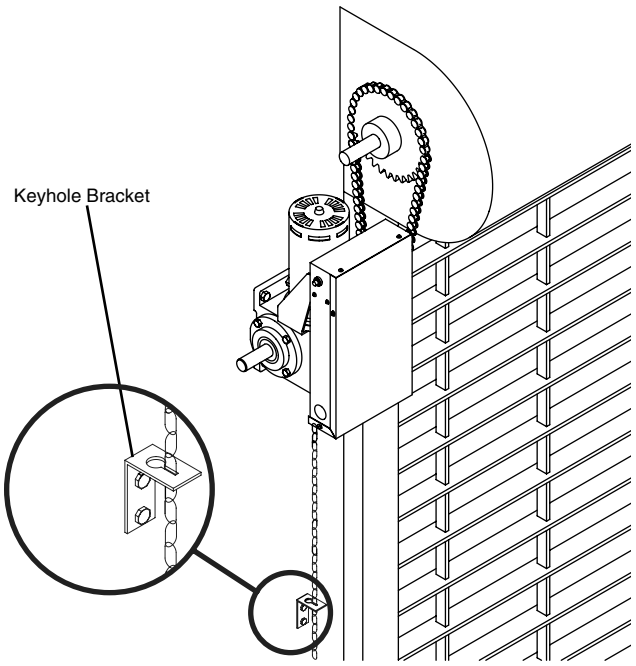

EMERGENCY MANUAL OPERATION

⚠ WARNING

To prevent possible SERIOUS INJURY from a moving chain, DISCONNECT electric power to the operator BEFORE manually operating your door.

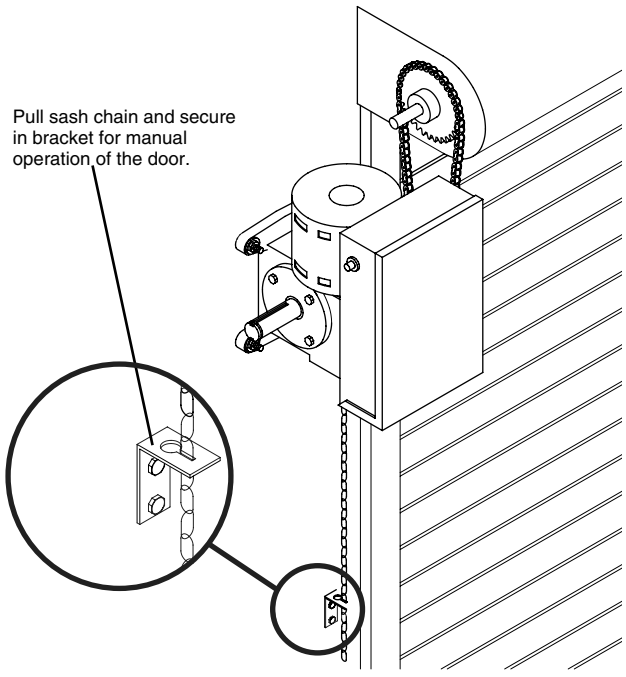

This operator a floor level disconnect chain to disconnect the door from the door operator allowing for manual operation of the door in case of emergency or power failure.

1. To disengage, pull the chain and secure in the disengaged position by slipping the end through the keyhole bracket mounted on the wall. Or if emergency egress device is used, pull handle to disengage operator from door.

2. The door may now be pushed up or pulled down manually. Release the disconnect chain to operate the door again electrically.

ENTRAPMENT PROTECTION ACCESSORIES (OPTIONAL)

SENSING EDGES

All types of sensing edges with an isolated normally open (N.O.) output are compatible with your operator. This includes pneumatic and electric edges. If your door does not have a bottom sensing edge and you wish to purchase one, contact the supplier of your operator.

If not pre-installed by the door manufacturer, mount the sensing edge on the door according to the instructions provided with the edge. The sensing edge may be electrically connected by either coiled cord or take-up reel. Refer to the steps below

Important Notes:

a) Proceed with Limit Switch Adjustments before making any sensing edge wiring connections to operator as described below.

b) Electrician must hardwire the junction box to the operator electrical box in accordance with local codes.

⚠ WARNING

To reduce the risk of SEVERE INJURY or DEATH, ALWAYS install reversing sensors when the 3-button control station is out of sight of door or ANY other control (automatic or manual) is used. Reversing devices are recommended for ALL installations.

TAKE-UP REEL: Take-up reel should be installed 12" above the top of the door.

COIL CORD: Connect operator end of coil cord to junction box (not supplied) fastened to the wall approximately halfway up the door opening.

MGJ LIMIT SWITCH ADJUSTMENT

MAKE SURE THE LIMIT NUTS ARE POSITIONED BETWEEN THE LIMIT SWITCH ACTUATORS BEFORE PROCEEDING WITH ADJUSTMENTS.

1. To adjust limit nuts depress retaining plate to allow nut to spin freely. After adjustment, release plate and ensure it seats fully in slots of both nuts.
2. To **increase** door travel, spin nut **away** from actuator. To **decrease** door travel, spin limit nut **toward** actuator.
3. Adjust open limit nut so that door will stop in open position with the bottom of the door even with top of door opening.
4. Repeat Steps 1 and 2 for close cycle. Adjust close limit nut so that actuator is engaged as door fully seats at the floor.

⚠⚠ WARNING

To avoid SERIOUS PERSONAL INJURY or DEATH from electrocution, disconnect electric power BEFORE manually moving limit nuts.

If other problems persist, call our toll-free number for assistance - 1-800-528-2806.

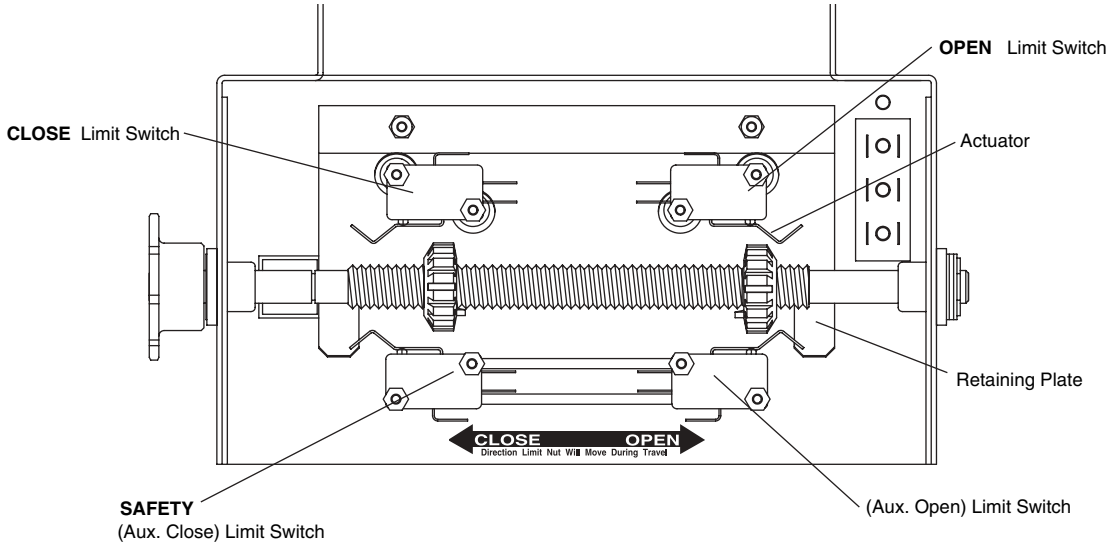

LGJ LIMIT SWITCH ADJUSTMENT

IMPORTANT NOTE: To avoid danger of possible damage to the door and operator, limit switches must be adjusted to their approximate positions before applying power to the operator.

⚠⚠ WARNING

To avoid SERIOUS PERSONAL INJURY or DEATH from electrocution, disconnect electric power BEFORE manually moving limit nuts.

A. Set Limit Direction Switch

Open the cover on the electrical enclosure and locate dip switch SW1 on circuit board. The direction of the limit travel is determined by the switch SW1 - pole #2 setting.

If your operator is mounted Motor Side Up:
Set dip switch SW1 - pole #2 to “ON” position.

If your operator is mounted Motor Side Down:
Set dip switch SW1 - pole #2 to “OFF” position.

NOTE: See Mounting Options on page 5 to verify the correct mounting application.

As determined by SW1 - pole 2 setting above, locate your OPEN and CLOSE limit switches. See the figure below for switch layout.

For Motor Side Up Mounting: Limit switch -A- is the OPEN limit. Limit switch -B- is the CLOSE limit.

For Motor Side Down Mounting: Limit switch -A- is the CLOSE limit. Limit switch -B- is the OPEN limit.

Auxiliary limit switches to control other functions are also present and should not be confused with the -A- and -B- limit switches. There are two(2) limit nuts on the threaded shaft that transverse the shaft as the operator opens and closes the door. When a limit nut nears the end of the shaft, it activates a switch(es).

B. Manually raise the door to a nearly open position. (see page 17, Manual Operation)

C. Depress the limit nut retaining bracket away from the slots in the limit nuts, and manually rotate to the OPEN limit nut until it depresses the OPEN limit switch lever (you can hear the switch click when the switch contacts transfer). Release the retaining bracket and be sure it engages in the slots of both limit nuts.

D. Manually lower the door to a nearly closed position, and repeat step C with the CLOSE (right) limit nut.

E. Test Limit Travel

Manually move the door to a half-open position to avoid damage due to incorrect (dip switch setting) limit travel. When power is applied, it will cause the door to OPEN when the limit nuts are traveling in the direction of the CLOSE limit switch or vice versa. In either instance, the limit nuts will travel past the limit switch and may cause damage to both the door and operator. See Step A for correct setting.

F. After completing the wiring connections on pages 11 thru 13, refer back to step C above for adjustment of limit switches to their final, exact position.

Limit Switch Layout

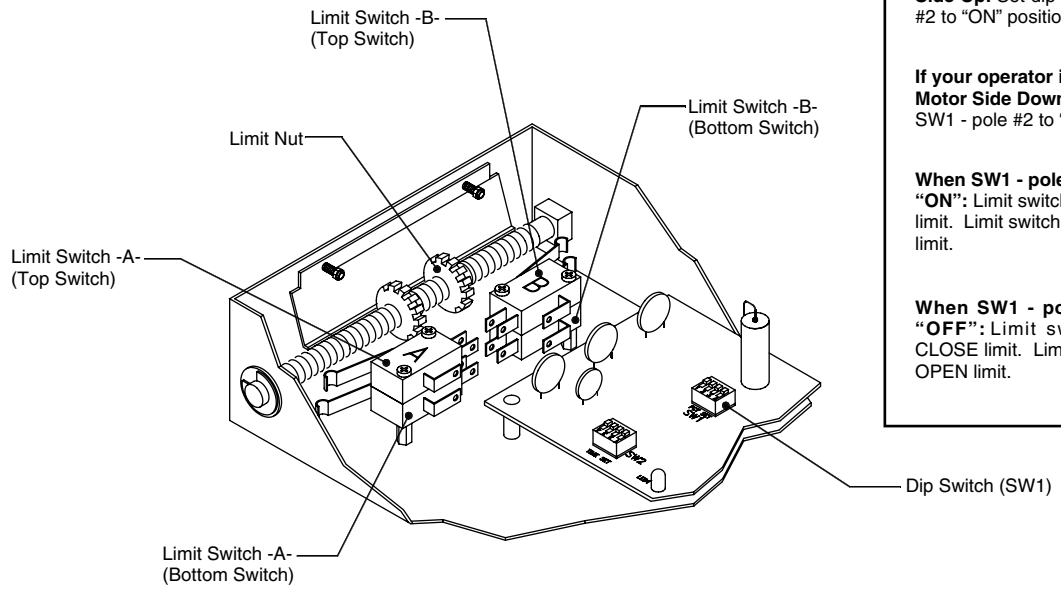

If you operator is mounted Motor Side Up: Set dip switch SW1 - pole #2 to “ON” position

If your operator is mounted Motor Side Down: Set dip switch SW1 - pole #2 to “OFF” position.

When SW1 - pole 2 position is “ON”: Limit switch -A- is the OPEN limit. Limit switch -B- is the close limit.

When SW1 - pole 2 position is “OFF”: Limit switch -A- is the CLOSE limit. Limit Switch -B- is the OPEN limit.

MAINTENANCE SCHEDULE

Check at the intervals listed in the following chart.

ITEM	PROCEDURE	EVERY 3 MONTHS	EVERY 6 MONTHS	EVERY 12 MONTHS
Drive Chain	Check for excessive slack. Check & adjust as required. Lubricate.*	●		🗐
Sprockets	Check set screw tightness	●		🗐
Fasteners	Check & tighten as required		●	🗐
Manual Disconnect	Check & Operate		●	🗐
Bearings & Shafts	Check for wear & lubricate	●		🗐

⚠⚠ WARNING

To avoid SERIOUS PERSONAL INJURY or DEATH from electrocution, disconnect ALL electric power BEFORE performing ANY maintenance.

- ♦ **Use SAE 30 Oil (Never use grease or silicone spray).**
- 🗐 **Repeat ALL procedures.**
- ■ **Do not lubricate motor. Motor bearings are rated for continuous operation.**
- ■ **Inspect and service whenever a malfunction is observed or suspected.**
- ■ **CAUTION: BEFORE SERVICING, ALWAYS DISCONNECT OPERATOR FROM POWER SUPPLY.**

HOW TO ORDER REPAIR PARTS

OUR LARGE SERVICE ORGANIZATION
SPANS AMERICA
For installation and service information
Call our toll free number - 1-800-528-2806

WHEN ORDERING REPAIR PARTS
PLEASE SUPPLY THE FOLLOWING INFORMATION:
PART NUMBER DESCRIPTION MODEL NUMBER

ADDRESS ORDER TO:

THE CHAMBERLAIN GROUP, INC.
Technical Support Center
6020 S. Country Club
Tucson, AZ 85706

CONTROL WIRING

DETERMINE WIRING TYPE

Refer to the wiring diagram located on the inside cover the electrical box to determine the type of control wiring.

MODEL MGJ

Standard C2 or B2 Wiring

Model MGJ operators are shipped from the factory with jumper set for C2 wiring, which requires constant pressure on button to close the door. If momentary contact in close direction is desired (B2 wiring) you must include an entrapment protection device. See close control jumper setting below.

Constant pressure on close (C2 wiring)
Red jumper wire was placed on terminal #2 in the electrical enclosure. The operator will require constant pressure on close control in order to keep door moving in the close direction.

Momentary contact on close (B2 wiring)
Move red jumper wire from terminal #2 to terminal #3. The operator will require only momentary contact to close the door.

SPECIAL CONTROL WIRING

If your operator was shipped from the factory with non-standard control wiring or with optional accessories that require additional instructions, refer to the wiring diagram(s) indicated in the special control wiring data box. When a replacement wiring diagram is present, wiring diagrams in this manual will not apply. Refer only to the replacement wiring diagram for all connections.

IMPORTANT NOTE: If your wiring diagram is missing, or you are unsure of the wiring type for your operator, contact the customer service department @ 1-800-528-2806.

MODEL LGJ

Standard G2 Wiring
Model LGJ operators are supplied with type G2 control wiring. Study the control features list below to determine the features and type of control equipment that may be used with your operator.

Entry Controls:
OPEN control requiring maintained contact.
OPEN control requiring only momentary contact.
CLOSE control requiring maintained contact.
CLOSE control requiring only momentary contact.
OPEN/CLOSE single control requiring momentary contact.
STOP control requiring momentary contact.

Safety Devices:
External Interlock switch to disable all control pneumatic safety (N.C.) to STOP while closing Safety Device to REVERSE while closing Door Lock Sensing Circuit.

Operational Features:
REVERSE (if closing) with momentary contact on OPEN.
AUTOMATIC TIMER to CLOSE from any device.
AUTOMATIC TIMER to CLOSE from selected devices.
DELAY REVERSE in either direction for 1 second.
STOP after maximum run time is exceeded.

Note: Refer to LGJ control connection diagrams on page 15.

LOCATING THE CONTROL STATION

All operators are supplied with some type of control station. Generally a three button station (OPEN/CLOSE/STOP) is provided. A two-position key switch or control station (OPEN/CLOSE) may be added or substituted when requested at the time of order. Mount the control station near the door.

⚠⚠ WARNING

To prevent possible SERIOUS INJURY or DEATH, install reversing sensors when the 3-button control station is out of sight of the door or ANY other control (automatic or manual) is used. Reversing devices are recommended for ALL installations.

MOUNT WARNING NOTICE

IMPORTANT: Mount WARNING NOTICE beside or below the push button station.

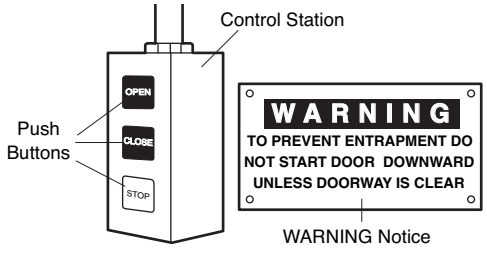

SINGLE PHASE SCHEMATIC DIAGRAM for MGJ

1754

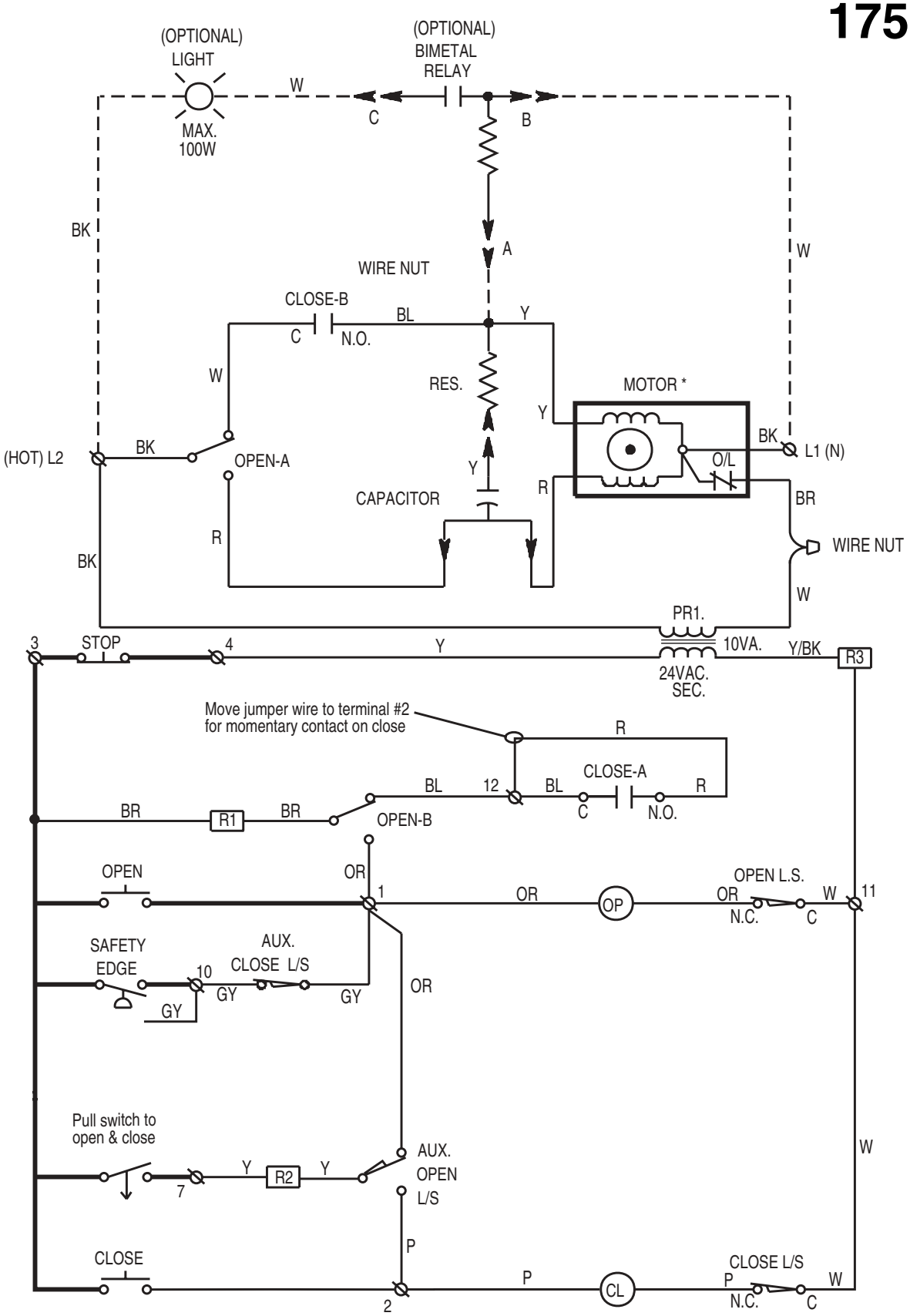

** To reverse motor rotation interchange red and yellow motor wires.*

THREE PHASE SCHEMATIC DIAGRAM for MGJ

1819

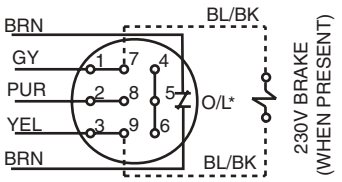

230 VOLT - 3 PHASE
MOTOR CONNECTION

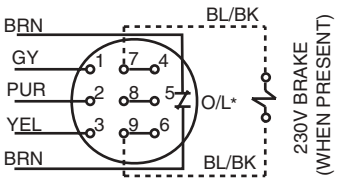

460 VOLT - 3 PHASE
MOTOR CONNECTION

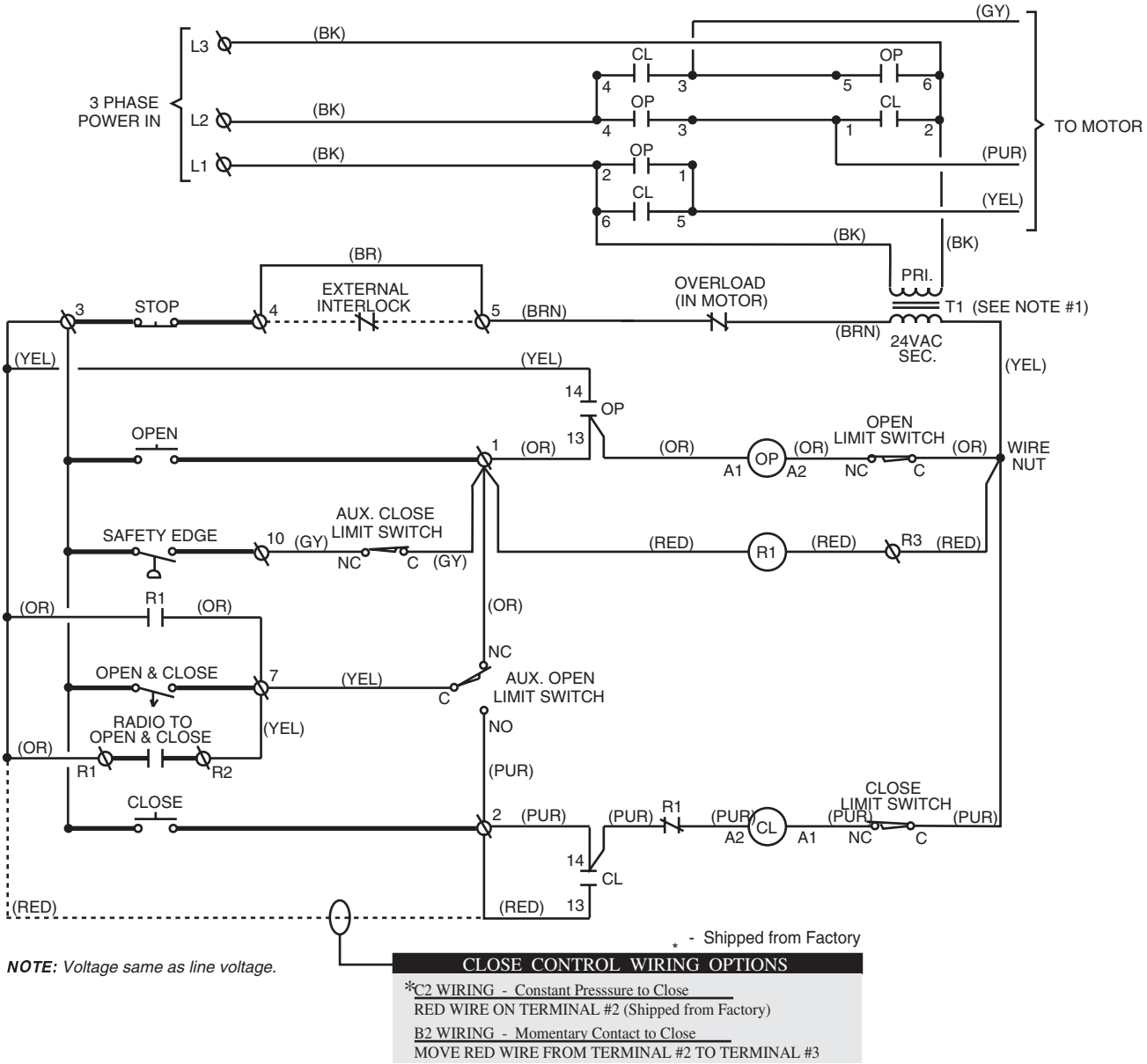

NOTE: *Voltage same as line voltage.*

* - Shipped from Factory

CLOSE CONTROL WIRING OPTIONS

*C2 WIRING - Constant Presssure to Close
RED WIRE ON TERMINAL #2 (Shipped from Factory)

B2 WIRING - Momentary Contact to Close
MOVE RED WIRE FROM TERMINAL #2 TO TERMINAL #3

SINGLE PHASE SCHEMATIC DIAGRAM for LGJ

1666

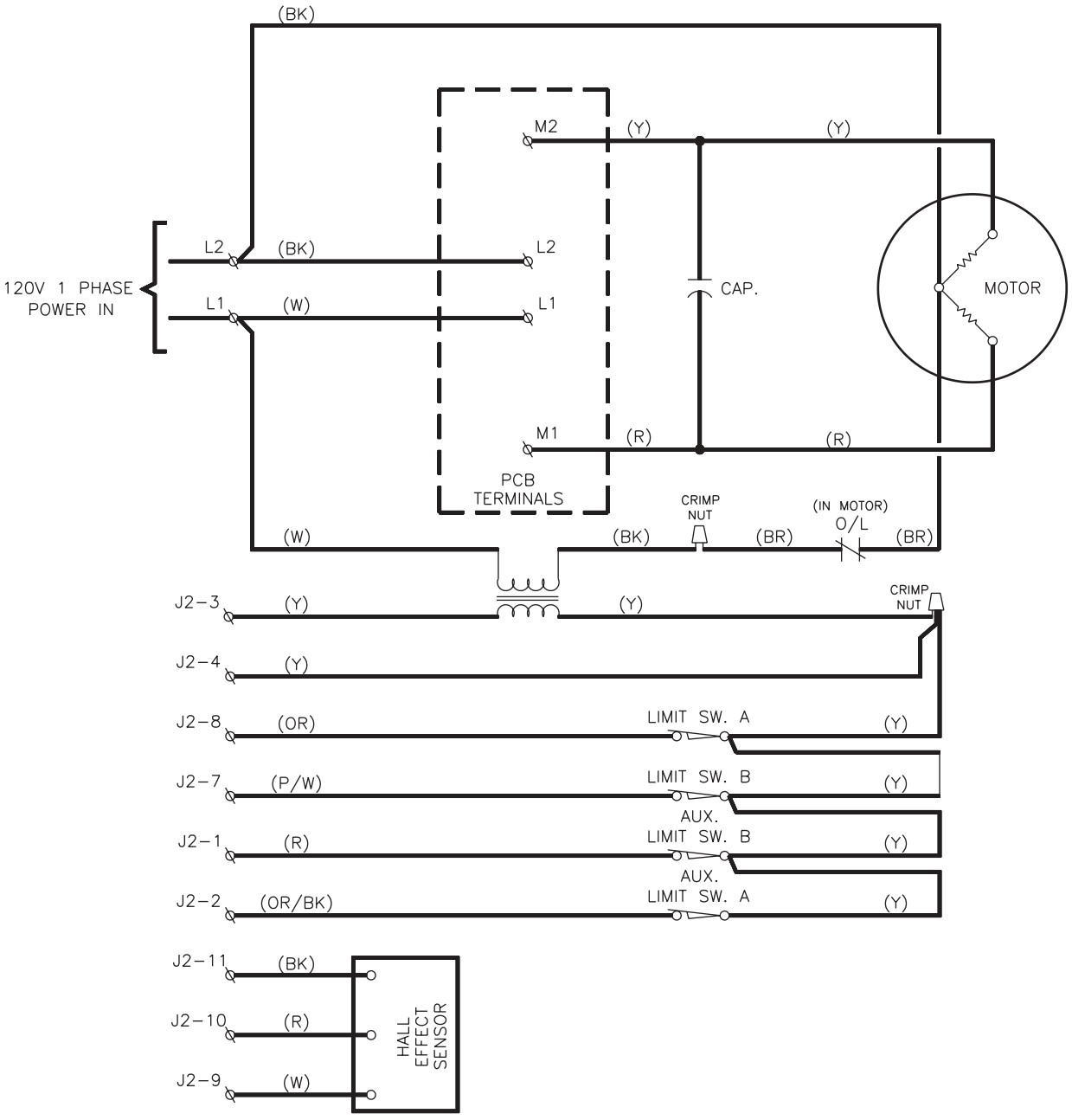

LGJ CONTROL CONNECTION DIAGRAM

NUMBERED BOXES CORRESPOND WITH TERMINALS ON J1 CONNECTOR STRIP

If Neccessary, Remove The Connector Block From The Board To Secure Each Wire Connection

Connect field wires to any terminal number shown in the respective column. See control options below for explanation of how field control will function for each terminal number.

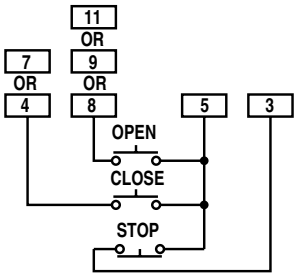

STANDARD 3 BUTTON CONTROL

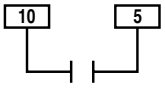

SENSING EDGE

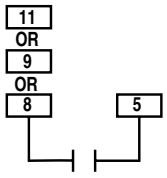

ANY OPEN CONTROL (SEE NOTE)

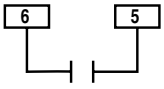

ANY OPEN & CLOSE CONTROL (SEE NOTE)

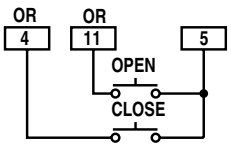

2 BUTTON CONTROL (SEE NOTE)

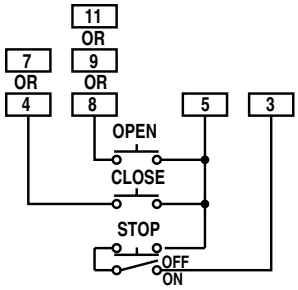

3 BUTTON CONTROL WITH KEYED LOCK-OUT

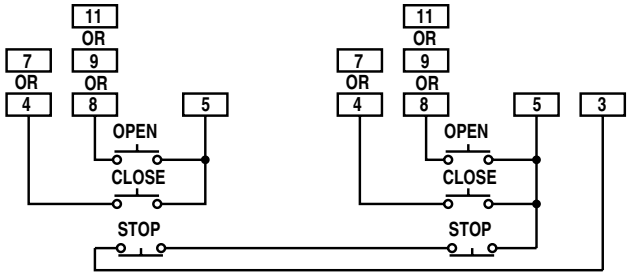

3 BUTTON CONTROL WITH MULTIPLE CONTROL STATIONS

IMPORTANT NOTE: **WHEN STOP BUTTON IS NOT USED, ADD A JUMPER FROM TERMINAL 3 TO TERMINAL 5.**

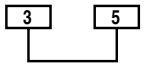

OPEN AND CLOSE CONTROL OPTIONS

WHEN CONNECTING AN OPEN CONTROL TO:

- 11 - Open control will require constant pressure to keep door moving.
- 9 - Open control will only require momentary contact and will set or reset timer to close.
- 8 - Open control will only require momentary contact and will NOT set or reset timer to close.

WHEN CONNECTING AN CLOSE CONTROL TO:

- 4 - Close control will require constant pressure to keep door moving.
- 7 - Close control will only require momentary contact. DO NOT add unless using an entrapment Protection device.

SWITCH ADJUSTMENTS

SWITCH #1 SETTINGS

MAXIMUM RUN TIME: 1 - ON: Maximum run time is 90 seconds.
OFF: Maximum run time is 45 seconds.

MAXIMUM RUN TIME: 2 - ON: CLOSE limit switch B
OFF: CLOSE limit switch A

3 - OFF: (DO NOT ADJUST)
4 - OFF: (DO NOT ADJUST)
CONSULT FACTORY FOR ADJUSTEMENT

SWITCH #2 SETTINGS

TIMER TO CLOSE SWITCH SETTING:
O = ON F = OFF

SETTING 1 2 3 4	TIME	SETTING 1 2 3 4	TIME
O O O O	= Disabled	O O O F	= 72 sec
F O O O	= 2 sec	F O O F	= 88 sec
O F O O	= 3 sec	O F O F	= 107 sec
F F O O	= 13 sec	F F O F	= 126sec
O O F O	= 15 sec	O O F F	= 148 sec
F O F O	= 23 sec	F O F F	= 172 sec
O F F O	= 32.5 sec	O F F F	= 198 sec
F F F O	= 43.6 sec	F F F F	= 224 sec

REPLACEMENT PART KITS LGJ

Below are replacement kits available for your operator. Optional modifications and/or accessories included with your operator may add or remove certain components from these lists. Please consult a parts and service representative regarding availability of individual components of kits specified below. Refer to page 10 for all repair part ordering information.

Complete Electrical Box Replacement Kit

K-LGJ2511 Model LGJ2511

Electrical Box Sub-Assembly Kits

K72-12581 LGJ Limit Shaft Assembly
K75-12582 LGJ Limit Switch Assembly
K79-11384 LGJ PC Board Assembly

Disconnect Assembly Kit

K75-12583 Model LGJ2511

K72-12581 LIMIT SHAFT ASSEMBLY KIT

Item	P/N	Description	Qty
L1	11-11425	Limit Shaft	1
L2	12-10458	3/8" Bearing, Plastic Flange	2
L3	13-10024	Limit Nut	2
L4	15-48B07AXX	Sprocket, 48B07	1
L5	81-11443	Rotor for RSL Assembly	1
L6	80-10053	Washer, Shim	1
L7	80-10025	Washer, Shim	1
L8	80-10026	Washer, Shim	1
L9	86-RP04-012	Roll Pin, 1/8" Dia. x 3/4" Long	1
L10	87-E-038	E Ring, 3/8"	3

K75-12582 LIMIT SWITCH ASSEMBLY KIT

Item	P/N	Description	Qty
S1	10-11391	Depress Plate	1
S2	18-10036	Spring, Depress Plate	2
S3	23-10041	Limit Switch	2
S4	23-11442	Limit Switch	2
S5	80-11445	Standoff, #4-40 Threaded x .19 Long	4
S6	82-PX04-16	Screw, #4-40 x 1" Pan Head Ph	4
S7	82-PX06-16	Screw, #6-32 x 1" Pan Head Ph	2
S8	84-LH-06	Locknut #6-32	2

COMPLETE ELECTRICAL BOX KITS

Item	P/N	Description	Qty
1	10-11390M1	Electrical Box Cover	1
2	10-11392M1	Electrical Box	1
3	21-13395	Transformer, LGJ 115V-24VAC	1
4	29-7642	Capacitor 220V 42MFD	1
5	42-9306	Terminal Block 6 Pole	1
6	42-13378	J2 Terminal Block, 16 Pole (1-16)	1
7	75-11395	Hall Effect Assembly	1
8	79-11378	PCB Board Assembly	1
9	80-10027	PCB Board Standoff	4
L1	11-11425	Limit Shaft	1
L2	12-10458	3/8" Bearing, Plastic Flange	2
L3	13-10024	Limit Nut	2
L4	15-48B07AXX	Sprocket, 48B07	1
L5	81-11443	Rotor for RSL Assembly	1
L6	85-FW-38	Flat Washer, 3/8"	4
L7	86-RP04-012	Roll Pin, 1/8" Dia. x 3/4" Long	1
L8	87-E-038	E Ring, 3/8"	1
S1	10-11391	Depress Plate	1
S2	18-10036	Spring, Depress Plate	2
S3	23-10041	Limit Switch	2
S4	23-11442	Limit Switch	2
S5	80-11446	Standoff, #4-40 Threaded x .19 Long	4
S6	82-PX04-16	Screw, #4-40 x 1" Pan Head Ph	4
S7	82-PX06-16	Screw, #6-32 x 1" Pan Head Ph	2
S8	84-LH-06	Locknut #6-32	2

LGJ ELECTRICAL BOX - ILLUSTRATED PARTS

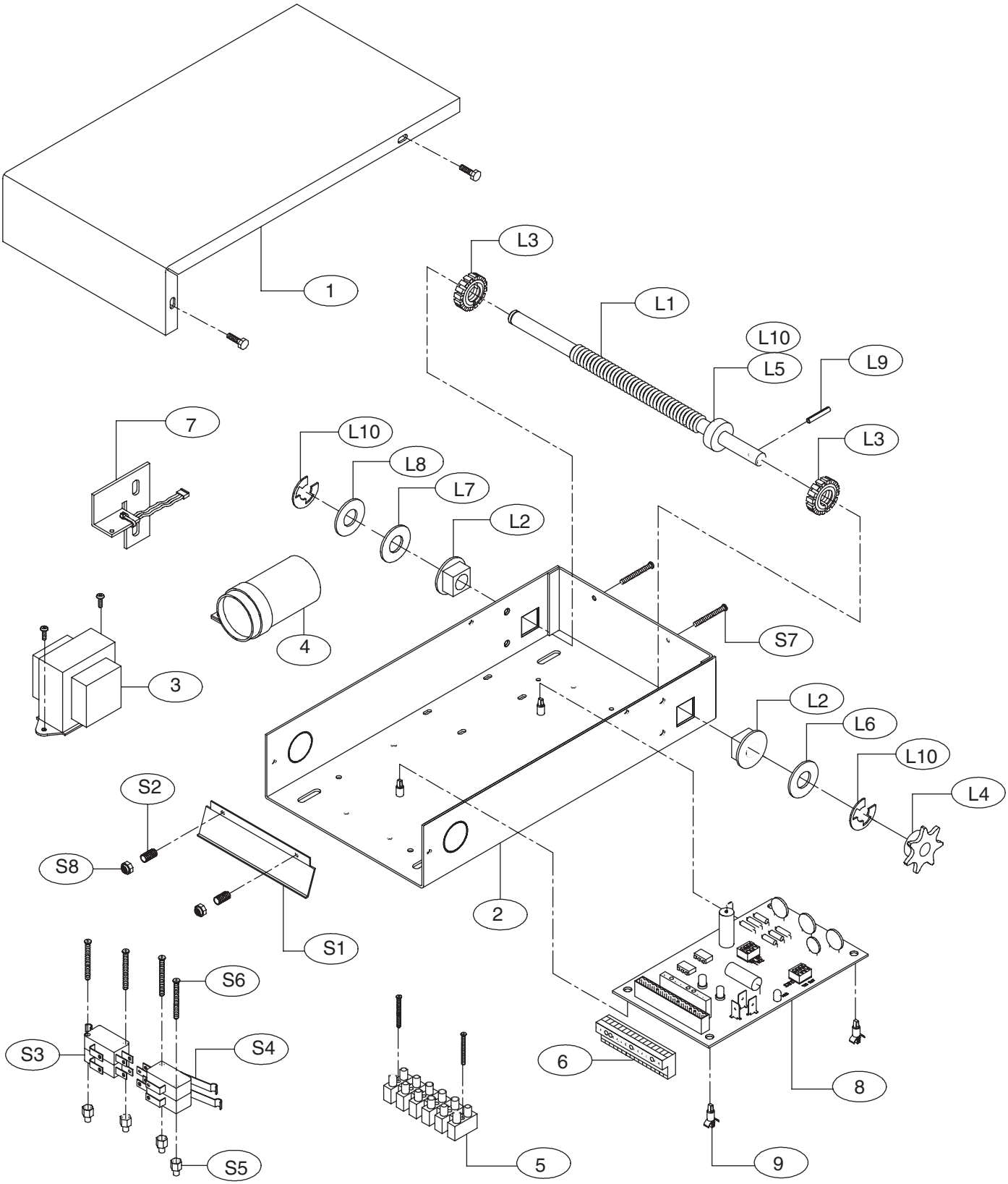

REPLACEMENT PART LISTS – MODEL LGJ

Refer to the parts lists below for replacement kits available for your operator. If optional modifications and/or accessories are included with your operator, certain components may be added or removed from these lists. Individual components of each kit may not be available. Please consult a parts and service representative regarding availability of individual components. Refer to page 10 for all repair part ordering information.

K75-12583 DISCONNECT ASSEMBLY KIT

ITEM	PART #	DESCRIPTION	QTY
D1	10-11023	Bevel Gear Yoke	1
D2	10-11393	Disconnect	1
D3	10-11394	Release Lever	1
D4	10-11399	Retaining Plate	1
D5	11-11424	Disconnect Shaft	1
D6	15-11379	Sprocket, 48B14/41B14	1
D7	18-11427	Compression Spring	1
D8	80-207-19	Key, 1/4 x 1-1/2" Long	1
D9	82-HX10-08T	Screw, #10-32 x 1/2" Hex	5
D10	85-FW-75	Flatwasher, 3/4"	1
D11	86-CP04-112	Cotter Pin 1/8" x 1-3/4" Long	1
D12	86-RP04-100	Roll Pin, 1/8" Dia. x 1" Long	1
D13	87-E-075	E Ring 3/4"	1

INDIVIDUAL PARTS

ITEM	PART #	DESCRIPTION	QTY
1	10-11397	Support Bracket	1
2	10-11389-1	Mounting Bracket (LH)	1
3	10-11398-2	Mounting Bracket (RH)	1
4	32-11435	Gear Reducer, 40:1	1
5	See Page 16	Electrical Box	1
6	K20-1025C1	Motor Kit	1
7	84-FN-10	Nut	4

LGJ ILLUSTRATED PARTS

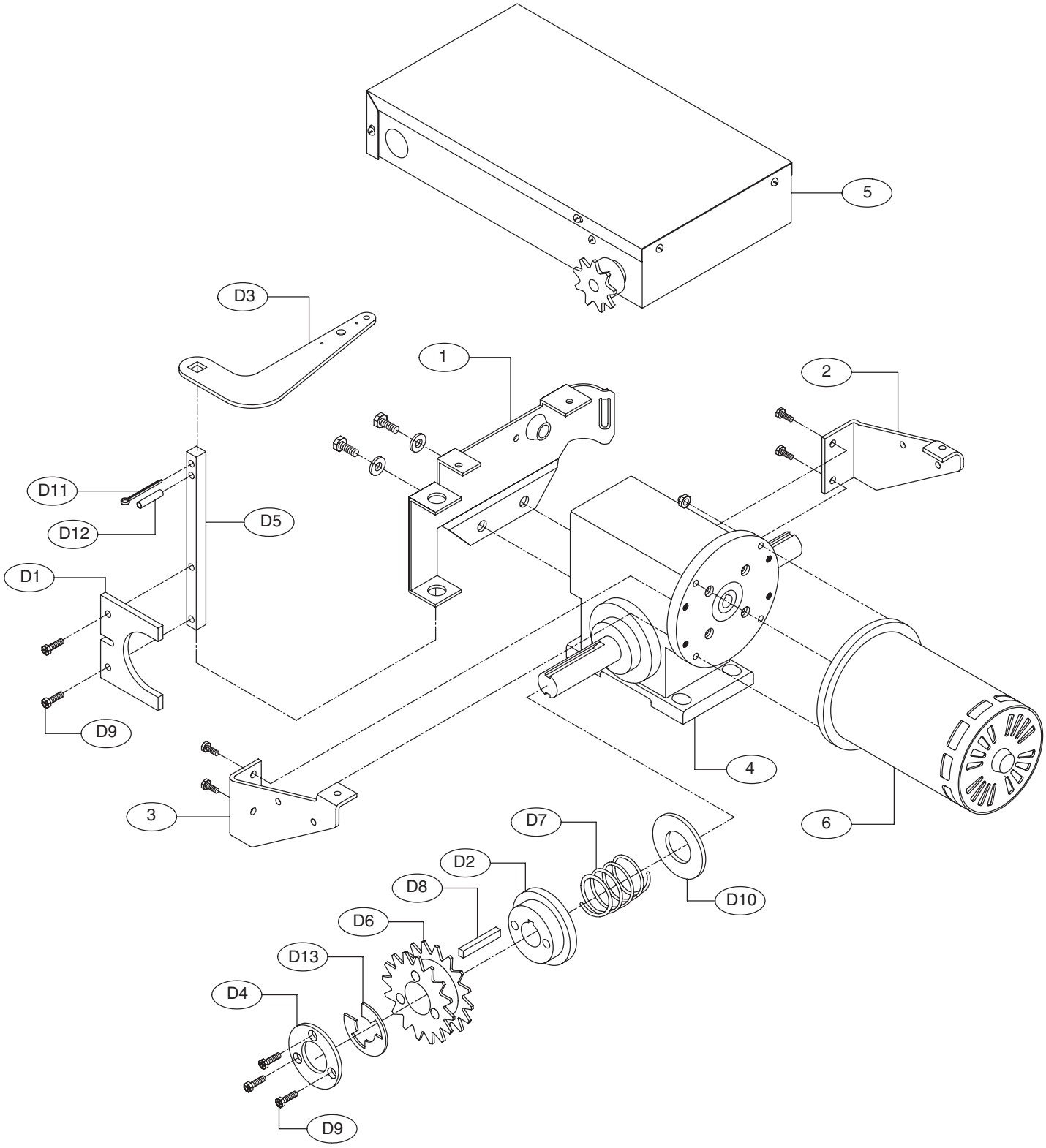

REPLACEMENT PART KITS MGJ

Below are replacement kits available for your operator. For replacement of electrical box, motor or brake components be sure to match model number of your unit to kit number below to ensure proper voltage requirements. Optional modifications and/or accessories included with your operator may add or remove certain components from these lists. Please consult a parts and service representative regarding availability of individual components of kits specified below. Refer to page 10 for all repair part ordering information.

Complete Electrical Box Replacement Kits

K-MGJ5011L	Model MGJ5011L
K-MGJ5023L	Model MGJ5023L
K-MGJ5025L	Model MGJ5025L
K-MGJ5038L	Model MGJ5038L
K-MGJ5043L	Model MGJ5043L
K-MGJ5011R	Model MGJ5011R
K-MGJ5023R	Model MGJ5023R
K-MGJ5025R	Model MGJ5025R
K-MGJ5038R	Model MGJ5038R
K-MGJ5043R	Model MGJ5043R

Electrical Box Sub-Assemblies

K72-12565	MGJ Limit Shaft Assembly
K75-12566	MGJ Limit Switch Assembly

COMPLETE ELECTRICAL BOX KITS

Item	P/N	Description	Qty
1	03-11112	Reversing Contactor (See Notes)	1
2	10-11403	Electrical Box Cover	1
3	10-11420	Electrical Box	1
4	10-11421	Capacitor Clamp (See Notes)	1
5	(See Var. Comp.)	Transformer	1
6	24-24-1	24V DPDT Relay	2
7	29-10338	Capacitor, 7MFD (See Notes)	1
8	29-2	Resistor, 20 Ohm	1
9	42-10040	Terminal Block Assy, 3 Lug	1
10	42-110	10 Position Terminal Block	1
L1	11-11373	MGJ Limit Shaft	1
L2	12-10458	3/8" Bearing, Plastic Flange	2
L3	13-10024	Limit Nut	2
L4	15-48B07AXX	Sprocket, 48B07	1
L5	80-10026	Washer, Shim 3/8" I.D. x .01	1
L6	85-FW-38	Flatwasher, 3/8"	2
L7	86-RP04-012	Roll Pin, 1/8" Dia. x 3/4" Long	1
L8	87-E-038	E Ring, 3/8"	1
S1	10-11419	Depress Plate	1
S2	18-10036	Spring, Depress Plate	2
S3	23-10041	SPDT Limit Switch	4
S4	31-13062	Spacer, .115" ID x 5/8" Long	8
S5	82-PX06-16	Screw, #6-32 x 1" Pan HD PH	2
S6	82-PX06-19	Screw, #6-32 x 1-3/8" Pan HD PH	8
S7	84-DT-06	Nut, #6-32 Double Tinnerman	4
S8	84-LH-06	Locknut #6-32	2

Motor Kits

K20-1050C1M	Model MGJ5011
K20-3050C4M	Models MGJ5023,MGJ5038,MGJ5043
K20-5150C6M	Model MGJ5025

Disconnect Assembly Kit

K75-12567	Model MGJ Operators

K72-12565 LIMIT SHAFT ASSEMBLY KIT

Item	P/N	Description	Qty
L1	11-11373	MGJ Limit Shaft	1
L2	12-10458	3/8" Bearing, Plastic Flange	2
L3	13-10024	Limit Nut	2
L4	15-48B07AXX	Sprocket, 48B07	1
L5	80-10026	Washer, Shim 3/8" I.D. x .01	1
L6	85-FW-38	Flatwasher, 3/8"	2
L7	86-RP04-012	Roll Pin, 1/8" Dia. x 3/4" Long	1
L8	87-E-038	E Ring, 3/8"	1

K75-12566 LIMIT SWITCH ASSEMBLY KIT

Item	P/N	Description	Qty
S1	10-11419	Depress Plate	1
S2	18-10036	Spring, Depress Plate	2
S3	23-10041	SPDT Limit Switch	4
S4	31-13062	Spacer, .115" ID x 5/8" Long	8
S5	82-PX06-16	Screw, #6-32 x 1" Pan HD PH	2
S6	82-PX04-20	Screw, #4-40 x 1-1/2" Pan HD PH	8
S7	84-DT-06	Nut, #6-32 Double Tinnerman	4
S8	84-LH-06	Locknut #6-32	2

VARIABLE COMPONENT KITS

Item	P/N	Description	MGJ5011	MGJ5023	MGJ5043	MGJ5025	MGJ5038
	21-5115	Transformer, 115V	●				
5	21-5230	Transformer, 230V		●		●	
	21-5460	Transformer, 460V			●		●

NOTES:

1) Reversing Contactor (03-11112), Used only on three phase operators. Single phase operators use relays.

2) Capacitor (29-10338), Capacitor Clamp (10-11421) and Resistor (29-2) used only on single phase operators.

MGJ ELECTRICAL BOX - ILLUSTRATED PARTS

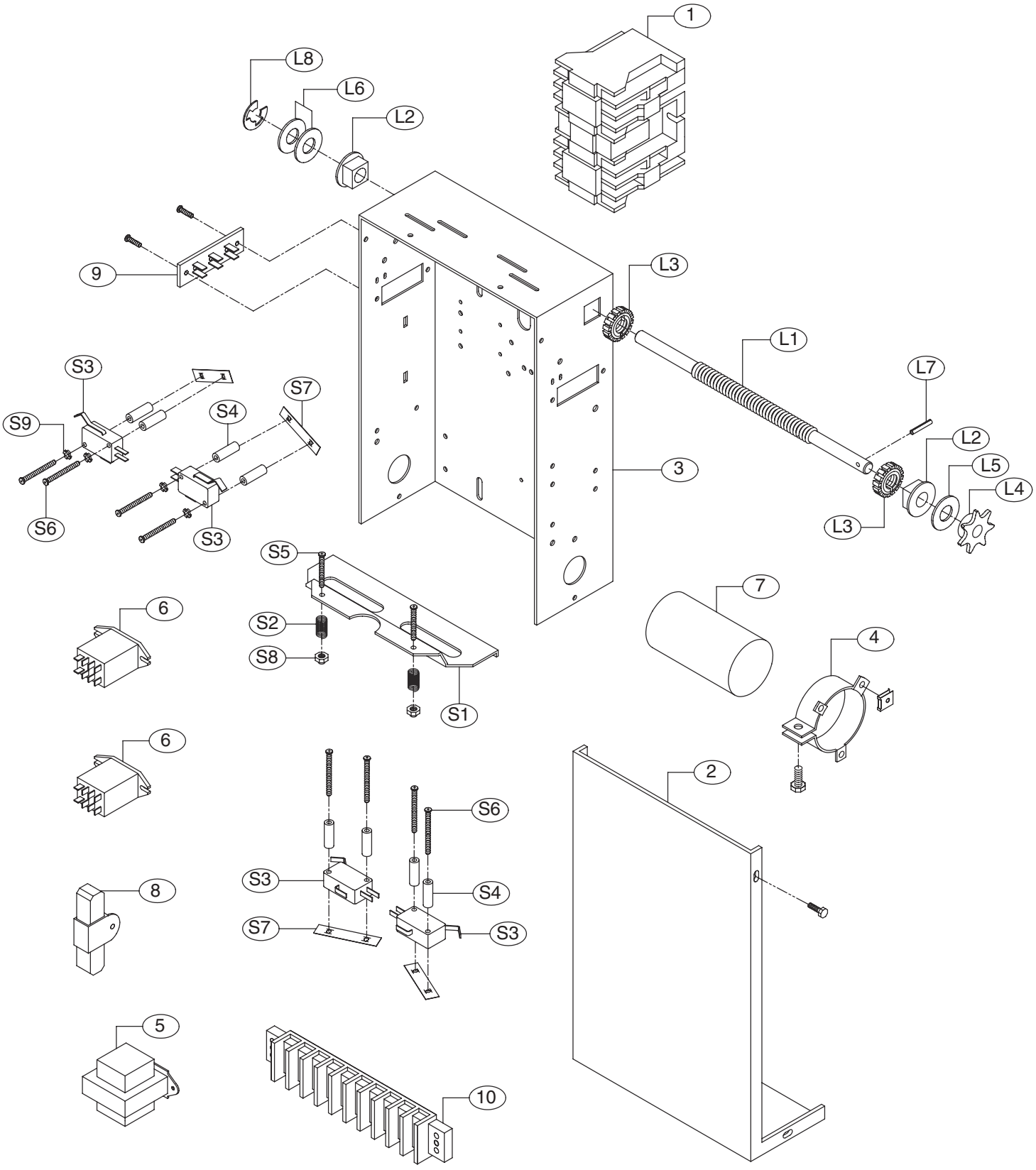

REPLACEMENT PART LISTS – MODEL MGJ

Refer to the parts lists below for replacement kits available for your operator. If optional modifications and/or accessories are included with your operator, certain components may be added or removed from these lists. Individual components of each kit may not be available. Please consult a parts and service representative regarding availability of individual components. Refer to page 10 for all repair part ordering information.

K75-12567 DISCONNECT ASSEMBLY KIT

ITEM	PART #	DESCRIPTION	QTY
D1	07-11418	Disconnect Hub	1
D2	10-11023	Bevel Gear Yoke	1
D3	10-11358	Disconnect Support Bracket	1
D4	10-11394	Release Lever	1
D5	11-11361	Disconnect Shaft MGJ	1
D6	15-11377	Sprocket, 41B19 x 1.25 Bore	1
D7	18-10467	Compression Spring	1
D8	19-8A-12	12ft. Of Sash Chain	1
D9	80-11416	Disconnect Key 1/4 x 1/4 x 7/8	2
D10	80-206-11	Washer, 1” I.D. x 1/16” Thick	1
D11	82-SH10-12	Screw, #10-32 Hex Head Socket	2
D12	85-LS-10	#10 Lock Washer ZP	2
D13	86-CP04-112	Cotter Pin, 1/8” x 1-3/4” Long	4
D14	86-RP04-100	Roll Pin, 1/8” Dia. x 1” Long	1
D15	87-E-100	E Ring, 1” Plated	2

INDIVIDUAL PARTS

ITEM	PART #	DESCRIPTION	QTY
1	10-11357	Brake Mounting Plate	1
2	10-11359	Front Bracket	1
3	32-11414	Gear Reducer, 45:1	1
4	See Page 20	Electrical Box	1
5	See Page 20	Motor	1

ILLUSTRATED PARTS – MODEL MGJ

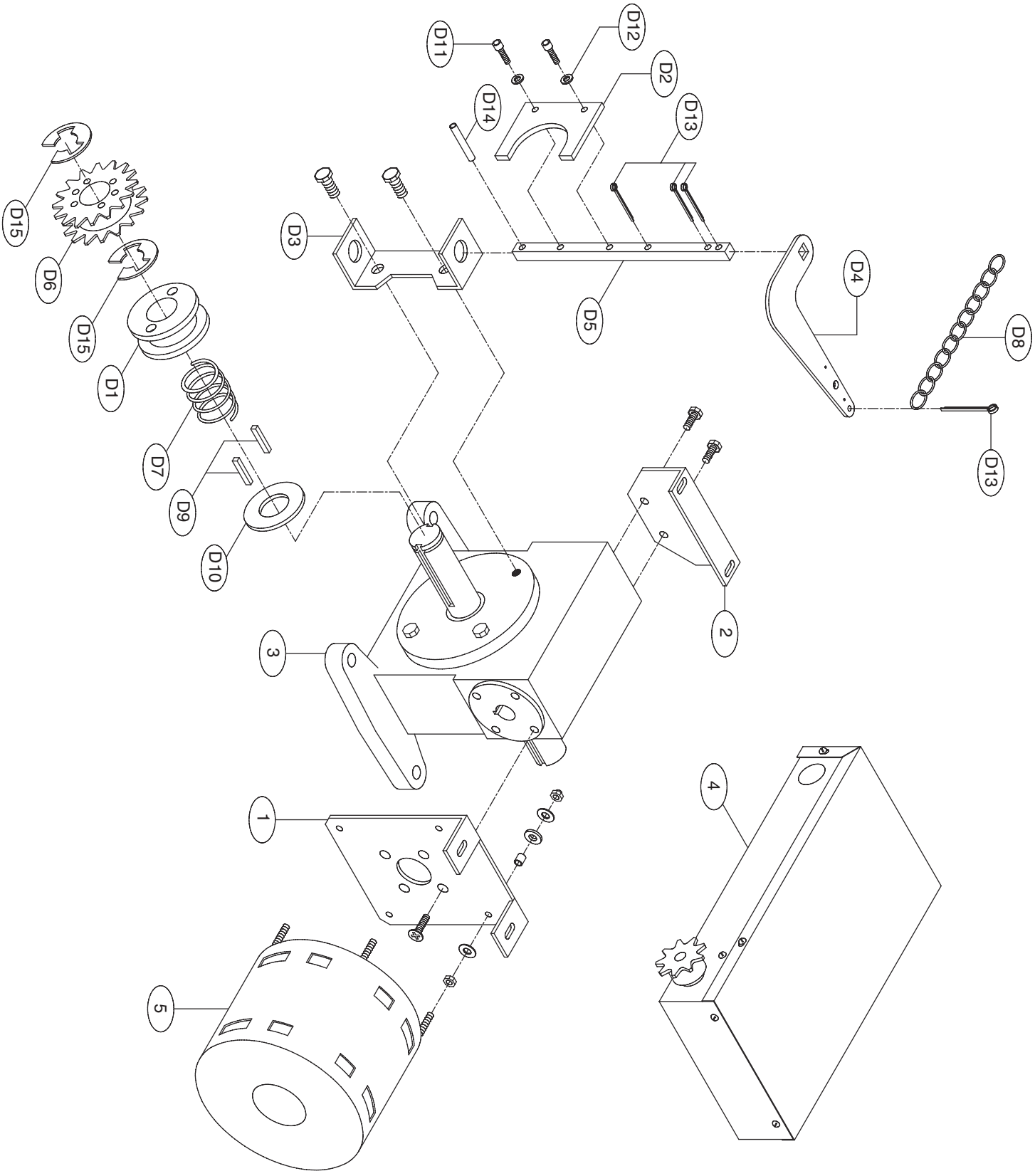

MGJ CONTROL CONNECTION DIAGRAM

IMPORTANT NOTES: **(Refer to page 15 for model LGJ control connections)**

1) The 3-Button Control Station provided must be connected for operation.
2) If a STOP button is not used, a jumper must be placed between terminals 3 and 4.
3) Auxiliary control equipment may be any normally open two wire device such as pull switch, single button, loop detector, card key or such device.

ATTENTION ELECTRICIAN:
USE 16 GAUGE OR HEAVIER WIRE
FOR ALL CONTROL CIRCUIT WIRING.

3 BUTTON STATION or 3 POSITION KEYSWITCH w/ SPRING RETURN TO CENTER AND STOP BUTTON

STANDARD

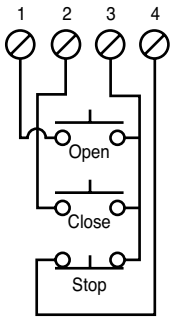

ALL CONTROL WIRING TYPES

2 OR MORE

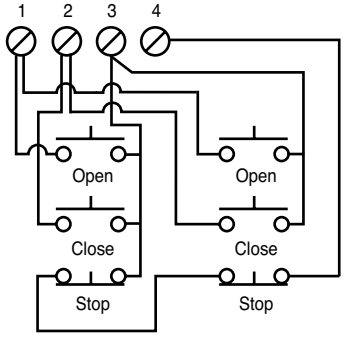

ALL CONTROL WIRING TYPES

KEY LOCKOUT

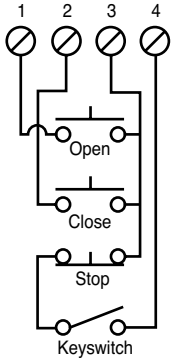

ALL CONTROL WIRING TYPES

1 BUTTON STATION or ANY AUXILIARY DEVICE

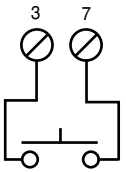

SEE NOTES #2 AND #3

OPEN / CLOSE

B2 or T1
WIRING TYPES ONLY

2 BUTTON STATION or 3 POSITION KEYSWITCH w/ SPRING RETURN TO CENTER

STANDARD

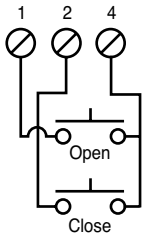

SEE NOTE #2

ALL CONTROL WIRING TYPES

2 OR MORE

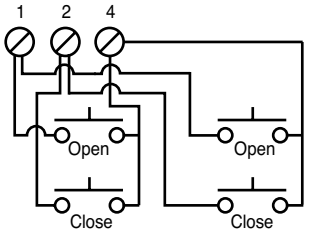

SEE NOTE #2

ALL CONTROL WIRING TYPES

SENSING DEVICE TO REVERSE OR STOP

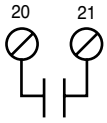

Sensing Device

ALL CONTROL WIRING TYPES

EXTERNAL INTERLOCK (THREE PHASE ONLY)

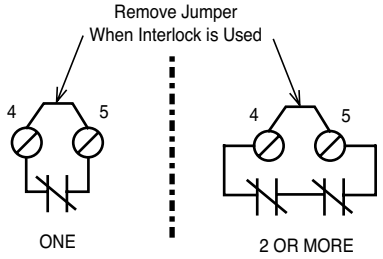

ONE

2 OR MORE

RESIDENTIAL RADIO CONTROLS

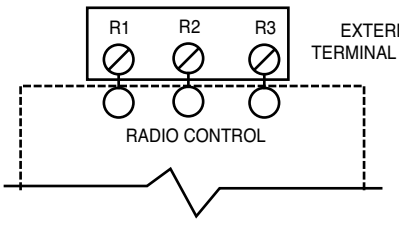

EXTERNAL TERMINAL BLOCK

ALL CONTROL WIRING TYPES

INTERCONNECTIONS SS90 FIRE DOOR CONTROLLER

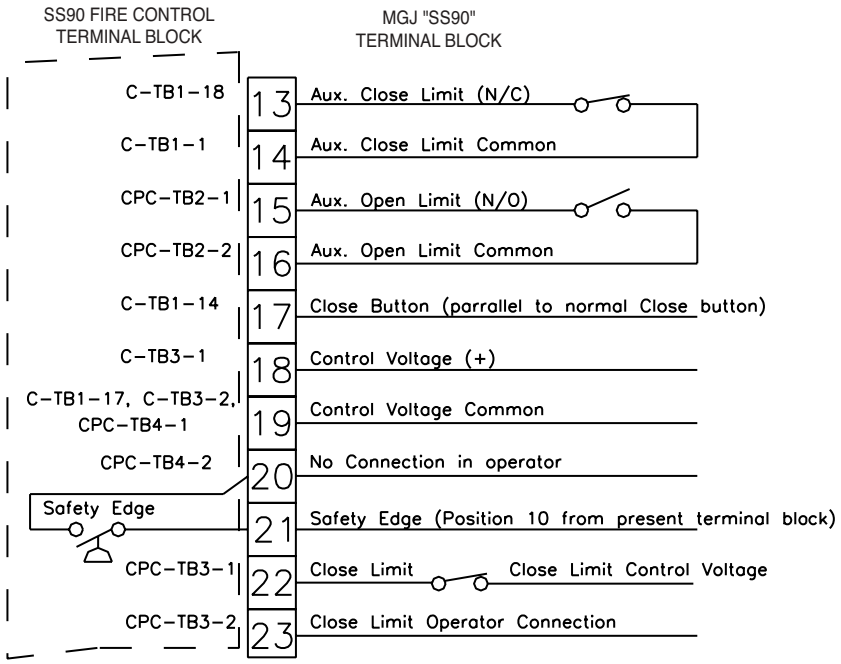

NOTE: *There are two boards in an SS90-CPC unit; the "C" and the "CPC". Therefore, connections are listed by Board - Terminal Block - Position. (Example CPC-TB3-2 designates a connection to the "CPC" board, terminal block 3, position 2)*

©2006, The Chamberlain Group, Inc.
All Rights Reserved